October 30, 2020

TUCKER INDUSTRIES INC.
Box 389 - 135 Minto Road
Palmerston, Ontario
N0G 2P0

Attention: Mr. Jason Montgomery

EUMACH DVM-2021 DOUBLE COLUMN UNIVERSAL MACHINING CENTRE

Dear Jason,

Thank you for the opportunity to quote the **EUMACH DVM-2021 DOUBLE COLUMN UNIVERSAL MACHINING CENTRE** for your facilities in Palmerston, Ontario.

www.masteel.ca / www.masteels.com

WELL DESIGNED MACHINE STRUCTURE AND MAXIMUM RIGIDITY & DYNAMICS

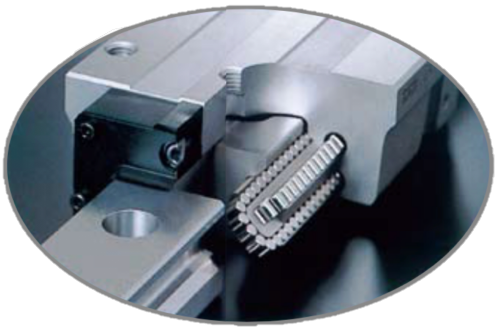

Heavy duty cross section roller linear guides on X /Y /Z axis to support heavy duty machining work and precision high speed performance. 4 rows of roller bearing support load in all directions.

X-Axis:
Rigid machine base with 4 slideways: 2 sets of heavy duty cross section roller guide and 2 sets of linear guide, ensure heavy and speed cutting.

This design ensures a capability of loading up to 30 tons (DVM - 5035), and still keeps the best dynamic accuracy.

Y-Axis:
3 point support slideways on Y axis. 2 guide ways on top and 1 in front. Heavy duty cross section roller guide ways provide high accuracy and rigidity to support high speed and heavy duty cutting.

Standard ram structure for Z-axis.
The ram for Z axis is 380x380 mm and made of special casting, which provides better sturdy cutting capability.

7490 MacDonald Road, Unit 120, Delta, British Columbia V4G 1N2, 800.913.4434
854 78 Avenue, Edmonton, Alberta T6P 1L7, 780.466.4693
940 Winston Churchill Boulevard, Oakville, Ontario L6J 7X5, 905.845.4434

The front door is designed for ease of workpiece loading/unloading, and daily maintainace and cleaning.

Clean and spacious enclosure ensures easily handling of large and heavy workpiece.

MACHINE SPECIFICATIONS

CAPACITY

X-axis (longitudinal table movement)	2210mm (87”)
Y-axis (cross milling head movement	2200mm (86.61”
Z-axis (up/down ram movement)	900mm (35.43”)
distance between columns	2130mm (83.86”)
distance from table top to spindle nose	from 900 to 1800mm (from 35.43” to 70.87”)
distance from table top to floor	915mm (36”)
X-axis slide way system	two roller ways + two linear ways
Y-axis slide way system	three roller ways (two on top, one in front)
Z-axis slide way system	380 x 380mm x 8 hardened + ground box ways with attached Rulon liners

RECTANGULAR TABLE

size	2000 x 1700mm (78.74” x 66.93”)
maximum table load	8000kg (17,637 lbs.)
t-slots	22mm

HORIZONTAL CNC ROTARY TABLE

diameter	1200mm (47.24”)
height	380mm (14.96”)
weight capacity	2500kg (5,511 lbs.)

SPINDLE + RAM

transmission	direct coupling
gear box	ZF 1:4
taper	CAT#50
speed	from 40 to 6000 rpm
ram section	380 x 380mm (14.96” x 14.96”)
ram type	box with precision hand scraped contact surfaces
saddle type	8-sided with rulon anti-friction material
motor power	22/26kW (29.5 hp/34.8 hp)

AUTOMATIC UNIVERSAL MILLING HEAD

spindle taper	CAT#50
minimum A/B-axis indexing increment	1°/1°
maximum spindle speed	5000 rpm
maximum spindle power	35 hp
maximum spindle torque	954.72Nm

FEED RATE

maximum cutting feed rate	10m (394”) per minute
rapid traverse X/Y/Z axis	15/15/10m (590”/590”/394”) per minute

AUTOMATIC TOOL CHANGER

tool shank	CAT#50
tool storage capacity	40 pockets
maximum tool diameter with adjacent tools	110mm (4.3”)
maximum tool diameter without adjacent tools	200mm (7.87”)
maximum tool length	350mm (13.78”)
maximum tool weight	15kg (33 lbs.)
tool change time	8 seconds

ACCURACY

Positioning accuracy X/Y/Z axis ISO 230-2	± 0.02mm (± 0.000787”)
Repeatability X/Y/Z axis ISO 230-2	0.015mm (0.000591”)

GENERAL

machine length x width	6890 x 4955mm (272” x 196”)
machine weight	24000kg (52,910 lbs.)

Note: The above specifications are subject to change without notice.

www.masteel.ca / www.masteels.com

EMENA VGCI AUTOMATIC UNIVERSAL MILLING HEAD WITH 1.0°/1.0° MINIMUM INDEX ANGLE

- Multi-angular automatic rotation head, indexing each 1º of both bodies, A and B axes.
- Spindle taper ISO 50.
- Tool DIN69871 - Drawbar DIN69872 ISO DIN7388 Type A.
- Drawing force on tool (1500 kg.).
- Tool release is done hydraulically.
- Fixing is done by means of a plate spring A50, DIN 2093.
- Angular contact ball bearing on the head, front three ID 90 m/m, rear pair ID 70 m/m, mounted on the tool holder spindle.
- Speed: Maximum 5,000 rpm.
- Torque: maximum 954.72Nm (see below charts).
- KLINGELNBERG HPG SP gear system hard finished or ground tooth flank.
- Gear teeth HIRTH Æ 280, Z360 (1º), two sets for positioning of bodies Nº 1 and 2 (Axes A and B).
- Axial cooling of cutting tool inside or at front of spindle, for tool holder with central drilling, for cooling liquid passage (on request Option 2-4).
- Outside cooling of cutting tool.
- Cooling of bearings of the spindle, with an oil flow cooled by outside chambers for heads with an rpm in excess of 3,000 rpm (on request Option 3-4).
- Air blast of taper for cleaning.
- Air blast at flange to stop coolant from entering the head.
- Compensator of axial load on spindle on tool release.
- All air/oil/coolant ducts inside the head.
- Lubrications of gears and bearings done with grease.
- All wiring inside head.

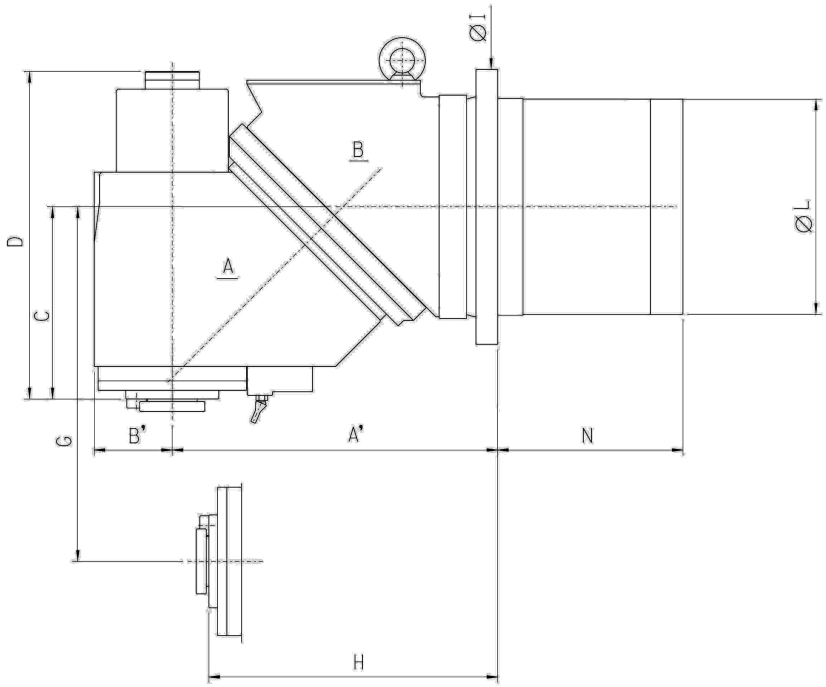

ISO	HP/CV	max. rpm	index angle	A	B	C	D	G	H	OI	OL	N
#50	35	5000	1°/1°	471,2	108	287	428,5	257,2	501	380	298	272,2

7490 MacDonald Road, Unit 120, Delta, British Columbia V4G 1N2, 800.913.4434
854 78 Avenue, Edmonton, Alberta T6P 1L7, 780.466.4693
940 Winston Churchill Boulevard, Oakville, Ontario L6J 7X5, 905.845.4434

VERTICAL SPINDLE POWER / TORQUE CHART

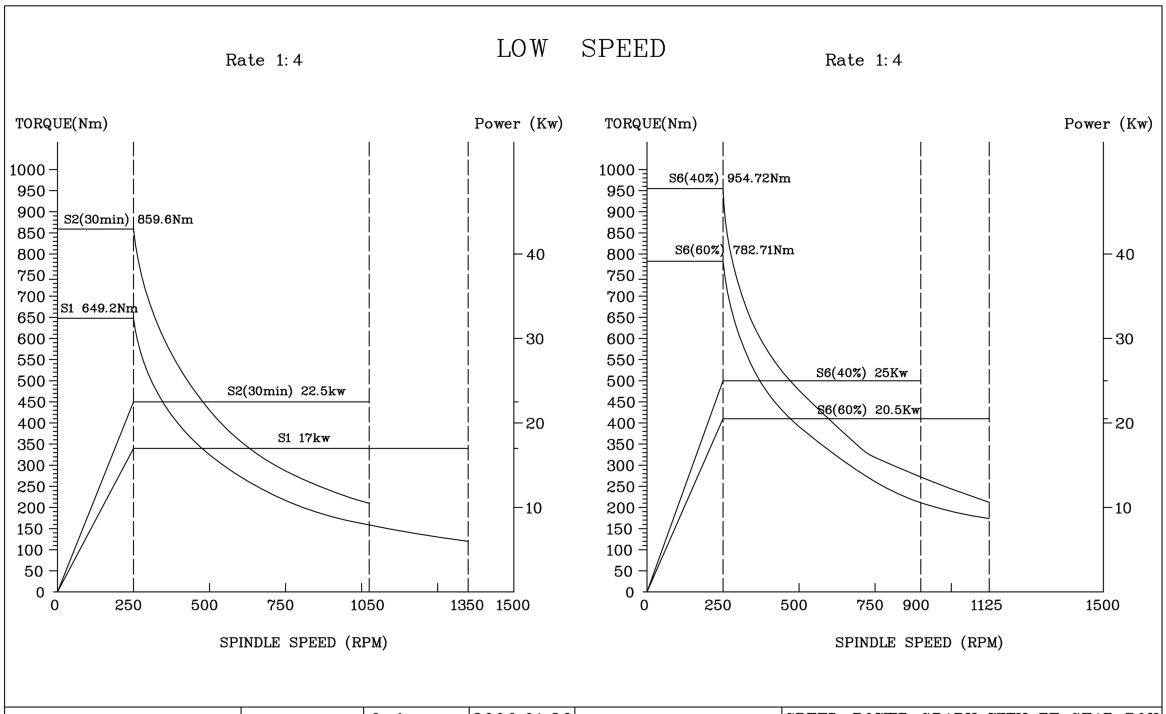

Eumach Co., Ltd. 新衛電腦機械股份有限公司	Drawer	Juhnsan	2006.01.26	Drawing Name	SPEED-POWER GRAPH WITH ZF GEAR BOX		
	Check			Drawing No.	1PH7137-2ND	Version	00
	Approval			Model	1PH7137-2ND	Page	/

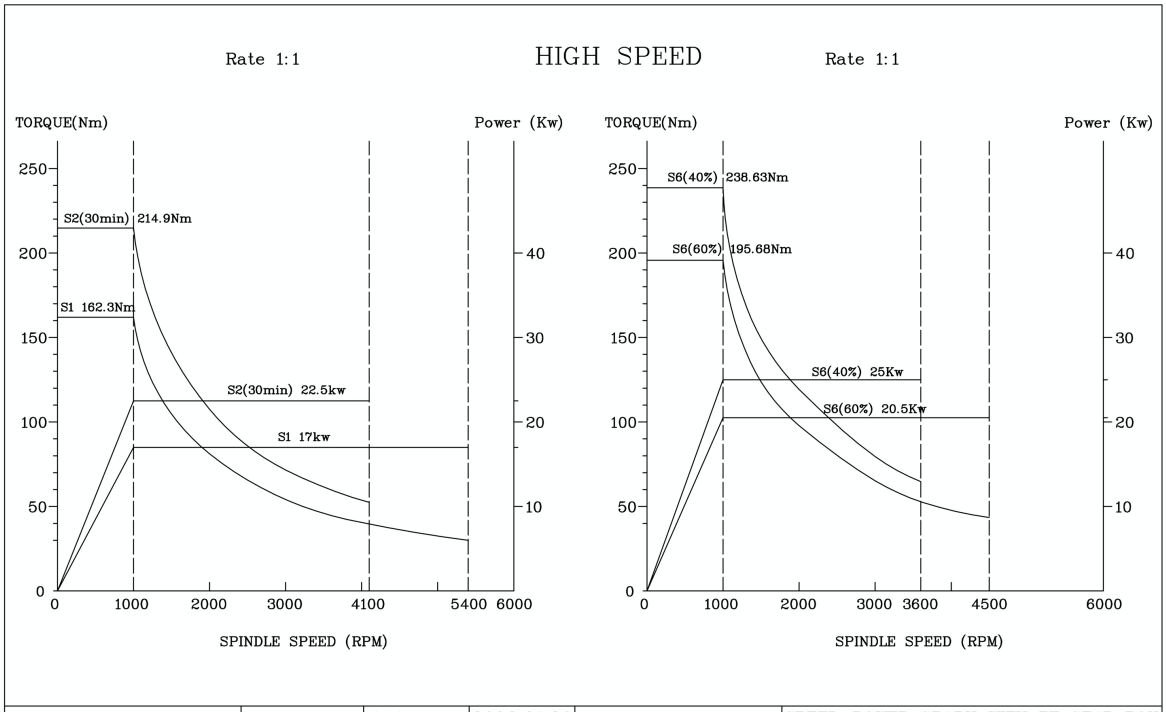

Eumach Co., Ltd. 新衛電腦機械股份有限公司	Drawer	Juhnsan	2006.01.26	Drawing Name	SPEED-POWER GRAPH WITH ZF GEAR BOX		
	Check			Drawing No.	1PH7137-2ND	Version	00
	Approval			Model	1PH7137-2ND	Page	/

AUTOMATIC UNIVERSAL MILLING HEAD PULL STUD DIMENSIONS

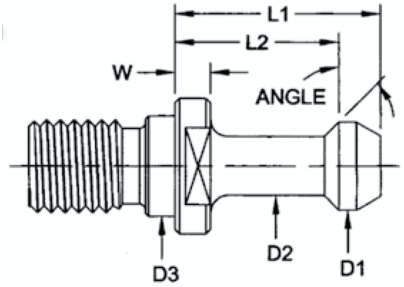

D1 = 0.906”
D2 = 0.669”
D3 = 1.030”
L2 = 1.386”
W = 0.394”
THREAD = 1” 8UNC
COOLANT HOLE = YES
ANGLE = 45°

MACHINE LAY-OUT

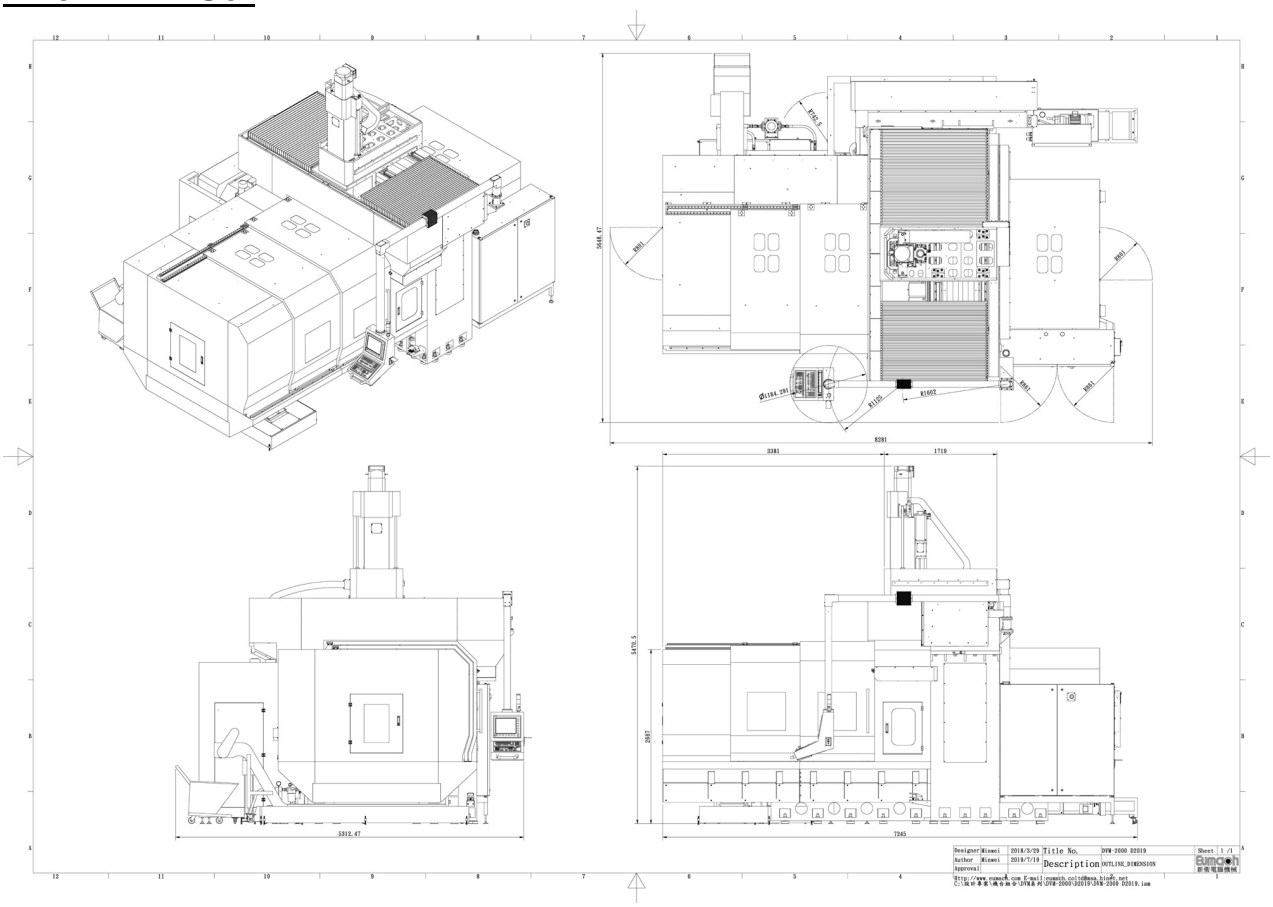

FAGOR 8065 CONTROL WITH 15" HIGH RESOLUTION COLOUR LCD MONITOR

- 3D colour graphics
- fully conversational programming + standard EIA format G-code programming
- RS232 / Ethernet / USB interface ports
- collision detection
- retrace function
- 200 user definable M functions
- feedrate in inverted function of time
- linear/helical/circular/cylindrical/polar coordinates
- mirror image, scaling, coordinate rotation
- custom macro programming
- g-code programming with on-screen help feature
- DXF file upload for conversational programming cycle
- tool life monitoring + tool inspection
- simulation with execution time estimate
- back ground programming + editing
- optional stop/block skip function
- 2GB program capacity with 2GB compact flash memory
- high speed machining mode with up to 200 blocks look-ahead, 1 ms block processing time
- engraving in X/Y plane + engraving along 4th axis rotary axis in Y/A plane if 4th axis is installed
- additional 20 offsets, unlimited programmable offsets within program
- g-code generation through conversational programming including 3D pocket with island
- automatic tool length calibration finds the tool length automatically
- inside/outside taper threading/boring cycle
- Masteel quick helical taper boring or helical taper threading interpolation programming
- free off-line programming software on the customer's computer
- Fagor remote support program (allowing Fagor to remotely connect to your machine through **Team**Viewer to assist in "machine-down" diagnostics, trouble shooting tooling problems and provide programming assistance - all at no charge during the warranty period)

www.masteel.ca / www.masteels.com

FAGOR Remote Support Program

Did you know that a Fagor Automation engineer can remotely connect to your CNC controller and assist in 'machine-down' issue diagnostics, troubleshooting a tooling problem, or even provide programming assistance? This service is free during your system's warranty[1] period, and is now available for a fee (one-time or annual programs are available), for the life of your Fagor CNC Controller.

We're so confident that our engineer can resolve your issues remotely, that we'll give you a 20% discount on any subsequent and required onsite service rates if we can't fix it remotely.[2]

Post Warranty Remote Support Pricing

One-Time Only Agreement

There will be a connection fee of $100 CAD, which includes one hour of service/support. Each additional hour will be billed at $60 CAD...there is a 2-hour minimum.

Ongoing/Annual Agreement

There will be a monthly recurring payment of $80 CAD for a single machine, $130 CAD for 2 machines, $180 CAD for 3 machines, or $220 CAD for 4 machines, at a single site (for more than 4 machines at a single site, please contact Fagor service for Special Pricing). This will include 2 support sessions per month, per machine, with a maximum of 4 hours support, per session. Additional hours of support will billed at $60 CAD. All software updates and upgrades (where possible) will be free for any machine(s) under an annual remote service agreement. Sessions are non-transferrable to other machines...support is tied to the registered serial number(s).

Contact: Fagor Service Department
Phone: (905) 670 7448
Email: service@fagorautomation.on.ca

Request Fagor Remote Support

Company Name: _____

Primary Site Address: _____

_____

_____

Fagor CNC Controller: 8060 8065 8070

Machine Type: Mill Lathe VMC Other

Programming: G-Code Conversational

Number of Machines under Agreement: _____

Duration of Agreement: One-Time Only

Ongoing/Annual Agreement

Payment Method: Fagor Account Terms

Credit Card: VISA MasterCard

Contact Person: _____

Phone: _____

Email: _____

[1] Warranty period for domestically purchased CNC systems is 2 years from registration date. Warranty for imported machines is 1 year from completion of the install.

[2] Requires current enrollment in an online service agreement. Normal service rate pricing will apply, to obtain 20% discount. No other discounts will apply. Discount applies to labor hours only. Travel hours will be billed accordingly, without discount. Travel expenses, hotel accommodations, rental car, etc. will be billed at actual costs.

Fagor Automation Canada. 3-6380 Tomken Road, Mississauga, ON Tel (905)670 7448 Fax (905) 670 7449

STANDARD + INCLUDED EQUIPMENT

Fagor 8065 control
ZF 1:4 gear box for high-torque heavy-duty machining
automatic universal milling head with 1°/1° minimum indexing increment
1200mm CNC rotary table
full enclosure glazed window type splash/chip guarding
20bar through the spindle coolant system
screw type & chain type chip conveyors
programmable coolant system
automatic lubrication system
spindle air blast system
working light
alarm light
m.p.g. (manual pulse generator = electronic hand wheel)
indication light for dwell and end of job
Renishaw TS27 + OMP40 tool + workpiece probe system
leveling bolts & pads
RS-232C terminal interface port
USB terminal interface port
machine & control manuals
toolbox with spanners & wrenches

EUMACH DVM-2021 UNIVERSAL MACHINING CENTRE PACKAGE PRICE: US $471,590

SPECIAL PACKAGE PRICE FOR TUCKER INDUSTRIES: US $415,000

TERMS AND CONDITIONS

The pricing
Pricing shown is in US funds.
The above pricing is F.O.B. Masteel in Oakville, Ontario.
Applicable taxes are extra.
CSA approval is included in the pricing.

The payment terms
30% with order, 60% on delivery, 10% 30 days after delivery.

Warranty
One (1) year on labour, two (2) years on parts.

Delivery
From stock at Masteel in Oakville, Ontario, subject to prior sale.

***CUSTOMER'S RESPONSIBILITY**

- Pick-up the machine at Masteel in Oakville, Ontario.
- Off load the machine from the truck at the customer's site.
- Provide all lifting equipment to move the machine into place for assembly.
- Provide a single concrete slab level foundation per the machine foundation requirements.
- Provide power to the machine by a certified electrician.
- Provide hydraulic + way lube oil plus coolant fluid for the machine.

***MASTEEL'S RESPONSIBILITY**

- Assemble / level the machine on the customer's shop floor and anchor the machine to the customer supplied foundation.
- Complete the machine installation and accuracy test.
- One day of basic machine operator training.

Pre-Start Health and Safety Review (PHSR) is the responsibility of the customer and is not included in the above pricing.

This proposal is valid for thirty (30) days.

We look forward to working with you on this project.

Sincerely,
MASTEEL AMERICA CORPORATION

Ron Nater
Manager, Eastern Canada
phone: 647.270.4434
email: ron@masteels.com
website: www.ronnater.ca