How to Obtain Tonnage Required for Punching Shaped Holes:

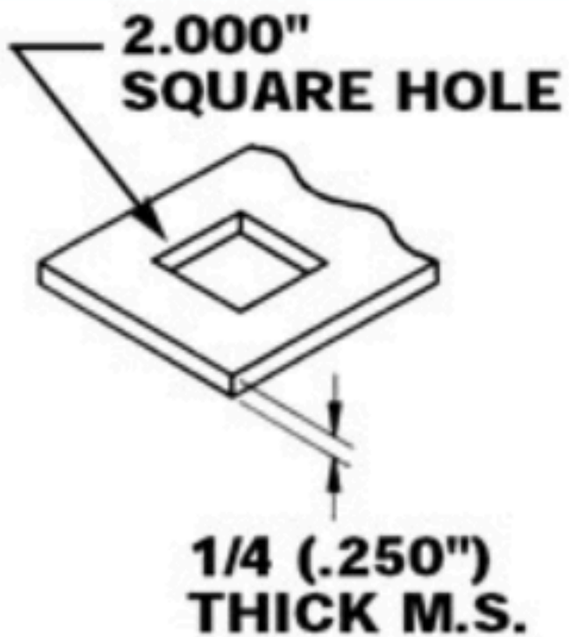

FORMULA:

TONNAGE IN MILD STEEL = PERIPHERY x MATERIAL THICKNESS x 25

EXAMPLE:

(2 + 2 + 2 + 2) x .250 x 25

ANSWER:

50 TONS

How to Obtain Tonnage Required for Punching Shaped Holes

Formula: TONNAGE IN MILD STEEL = PERIMETER X MATERIAL THICKNESS X 25

Example: (2 + 2 + 2 + 2) X .250 X 25 = 50 TONS